Francis H. Cicchinelli, Jr.
Mayor

Massillon
Means More!

CITY OF MASSILLON ENGINEERING
151 LINCOLN WAY EAST
MASSILLON, OHIO (330)830-1722
FAX: (330)830-1786

SIDEWALK AND CURB DETAILS

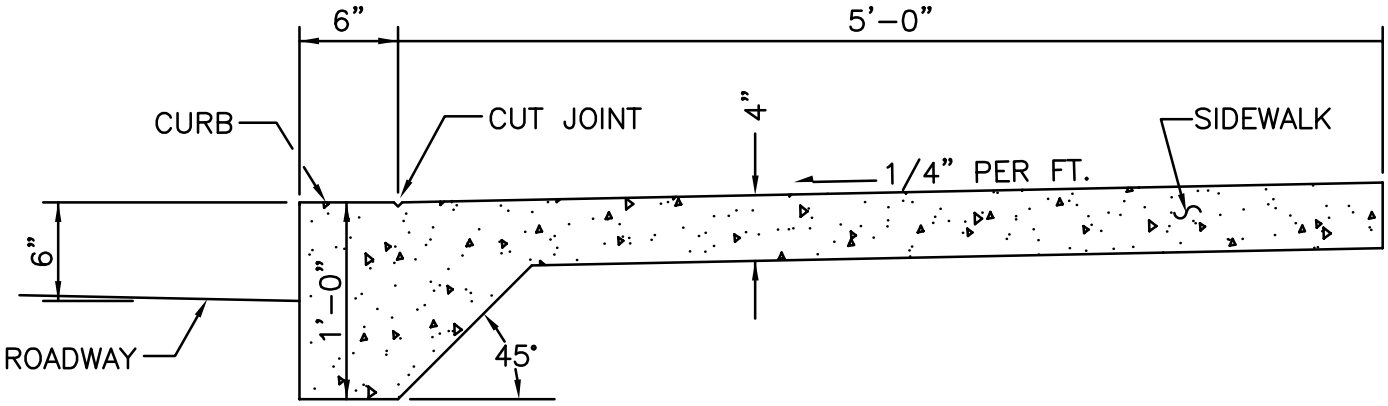

COMBINED CURB & SIDEWALK

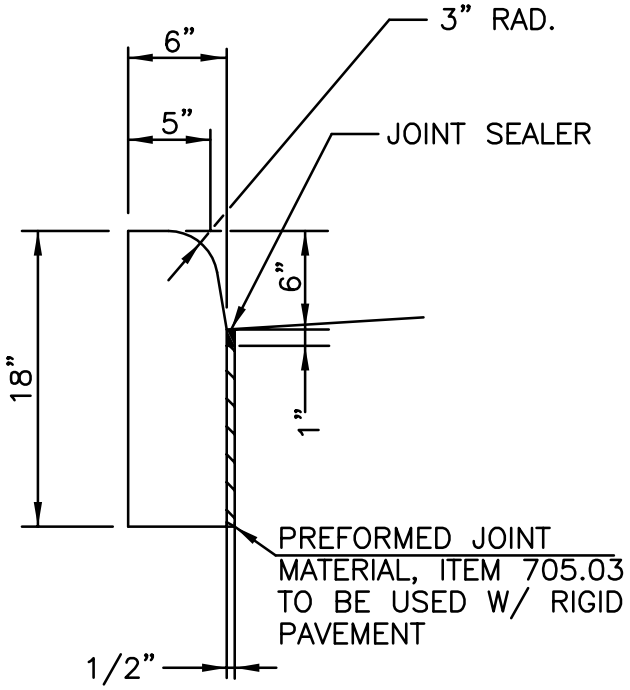

CURB TYPE 6

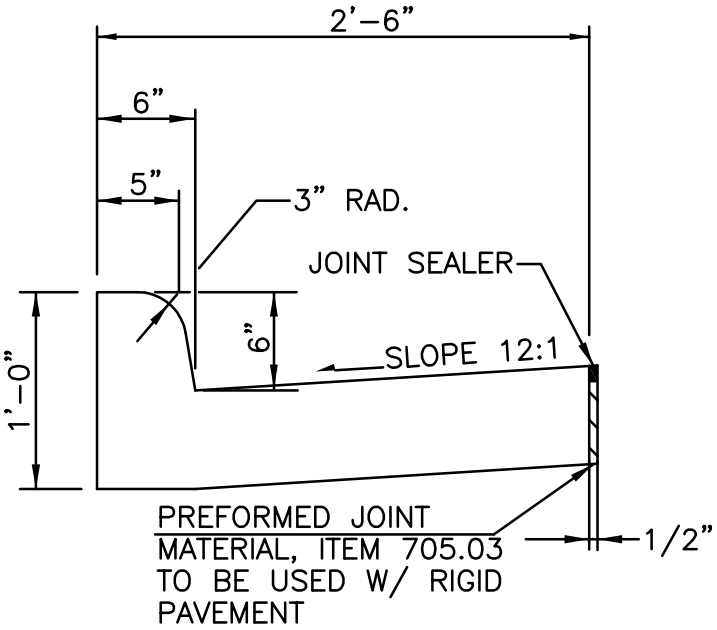

CURB TYPE 2

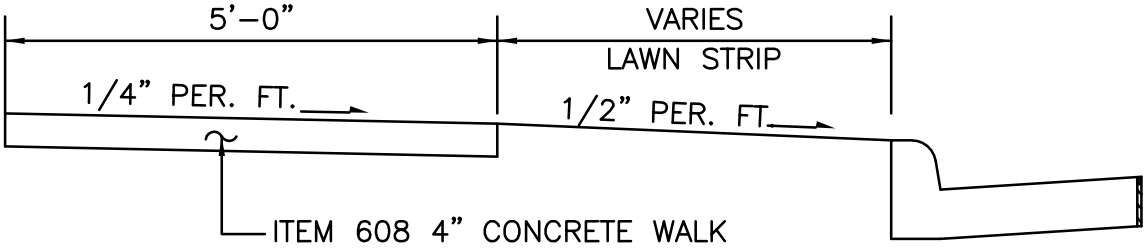

SIDEWALK